A

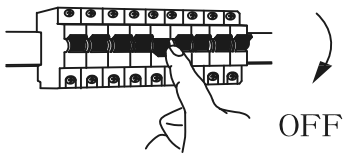

rabalux®

72400

B

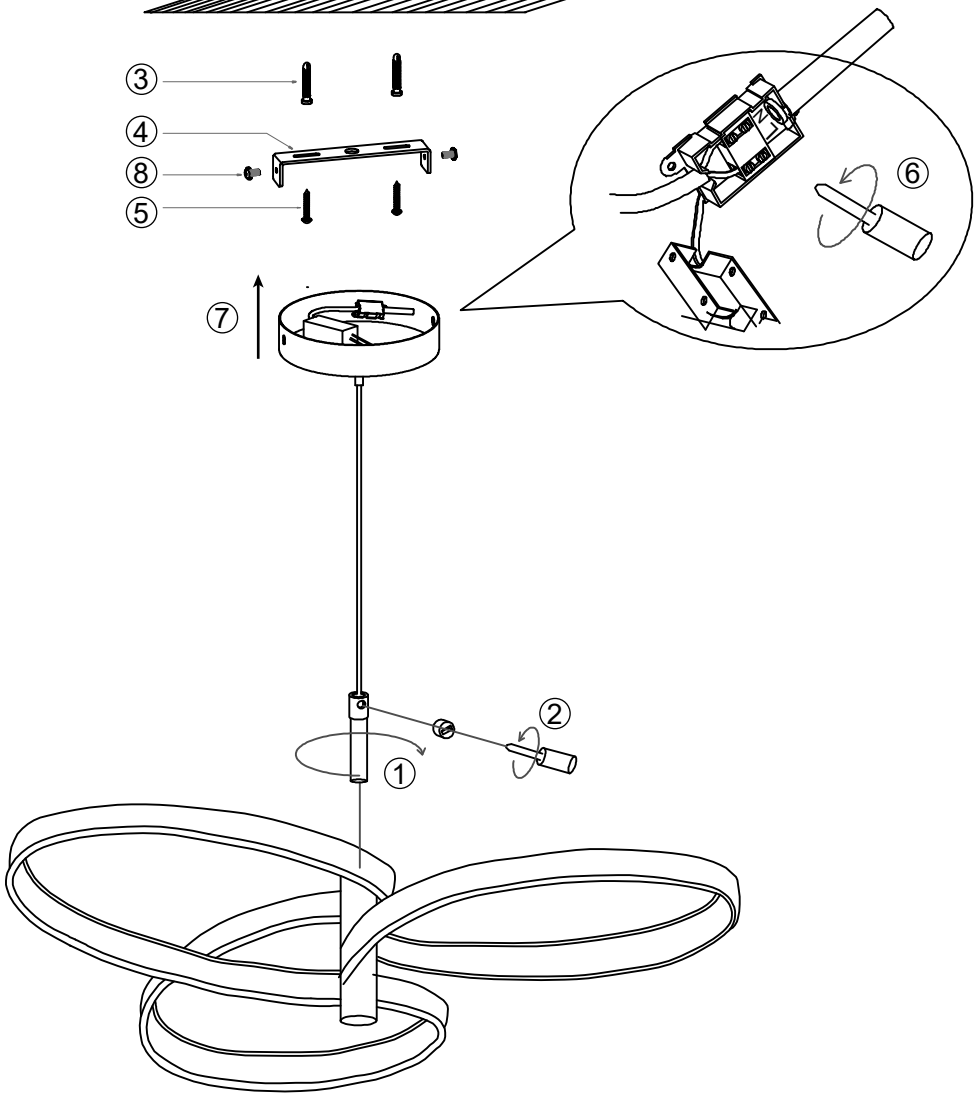

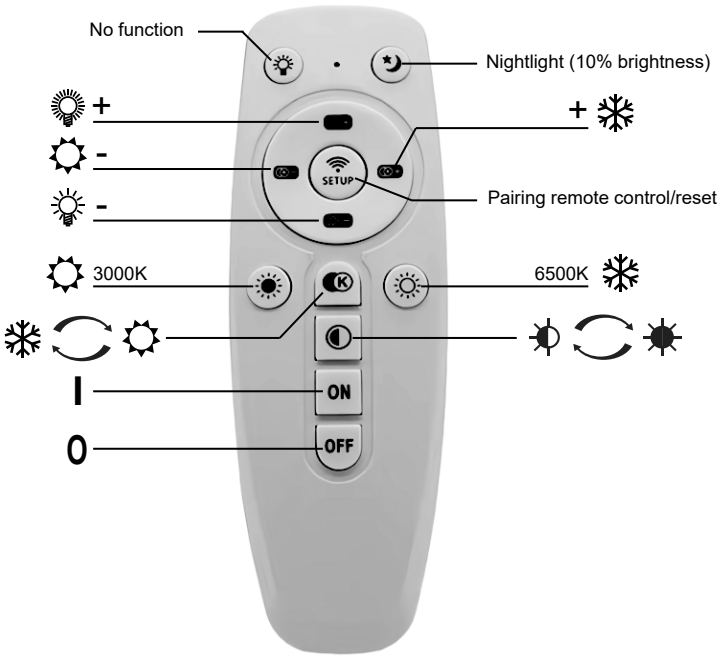

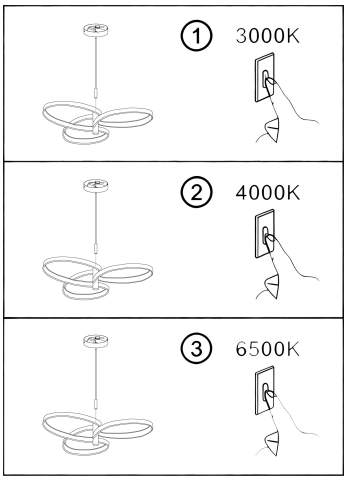
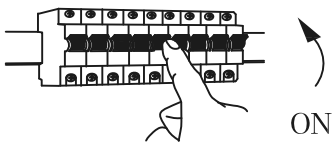
C